Universal Manufacturing and Distribution

Item No	W*D	Gauge
MS1224	12 x 24	18

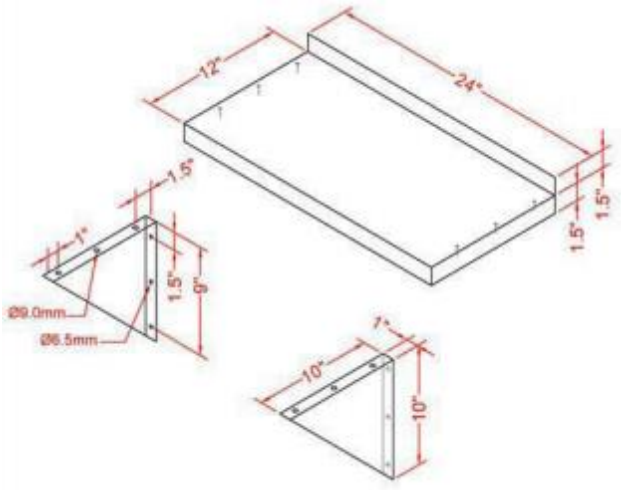

NOTE:

1. ALL VISIBLE WELDS TO BE GROUND SMOOTH AND POLISHED TO A MATCHING FINISH.
2. ALL NON-VISIBLE WELDS TO BE GROUND SMOOTH AND PAINTED WITH A F.I. APPROVED PAINT
3. ALL EDGES TO BE SMOOTH AN FREE FROM BURRS
4. ALL FABRICATION TECHNIQUES AND COMPONENTS TO BE APPROVED BY F.I. PRIOR TO FABRICATION.

   SMOOTH ROUNDED SAFE, ENCLOSED SIDES